DURABOOK
Prepared for the Unexpected

U11I Rugged Tablet Folio Case

User's Manual

DURABOOK

P/N: 62+009682+00

©2021 Twinhead International Corp and/or its affiliates. All rights reserved.

Package Contents

If any of following items is damaged, please contact your retailer.

Folio case

Bracket (4)

Screw (8)

NOTE

The pictures are for reference only, actual items may slightly differ.

Installation

This section will guide you on how to install the folio case of your tablet.

Installing the Folio Case

To install the folio case, follow the steps below:

1. Remove the 2 thread bushings (A) at the bottom of the device.
2. Remove the screws of the bumpers; there are 8 screws in total.

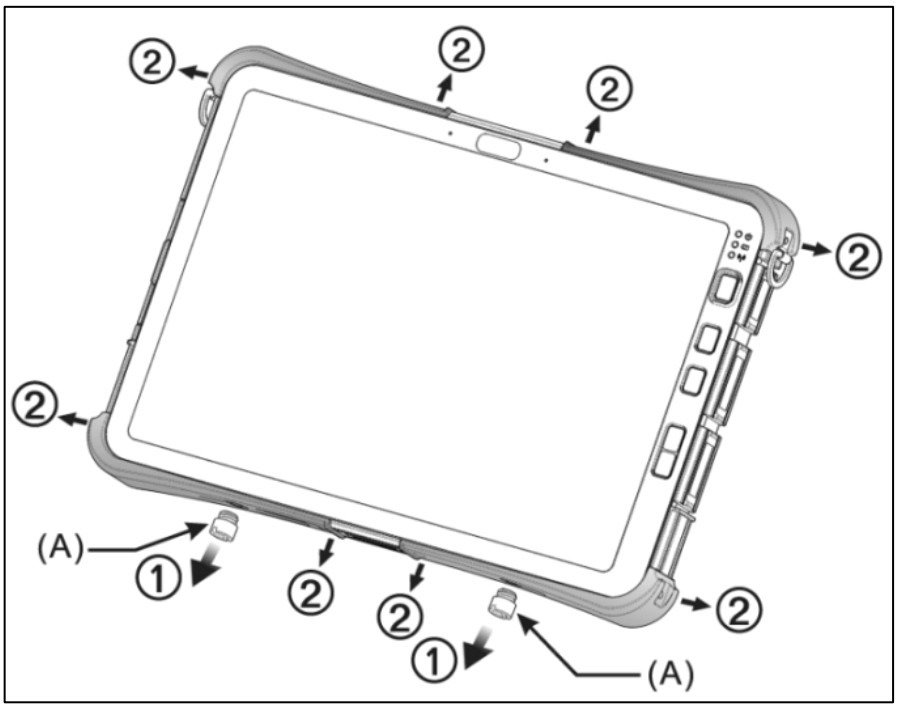

3. Remove the 4 bumpers by moving them to the side.

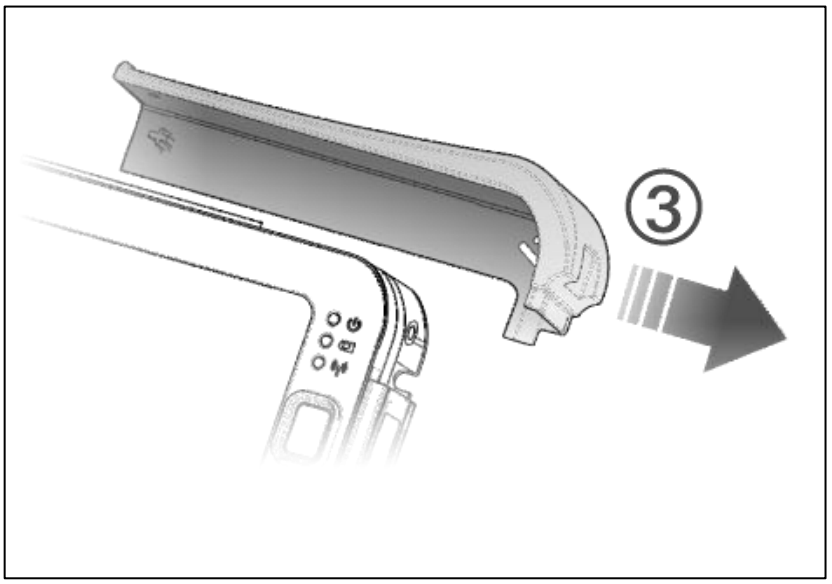

4. Install the brackets (B) as shown in the images.
5. Mount on the bracket with 2 small screws in place. Please repeat this procedure for the other bumpers.

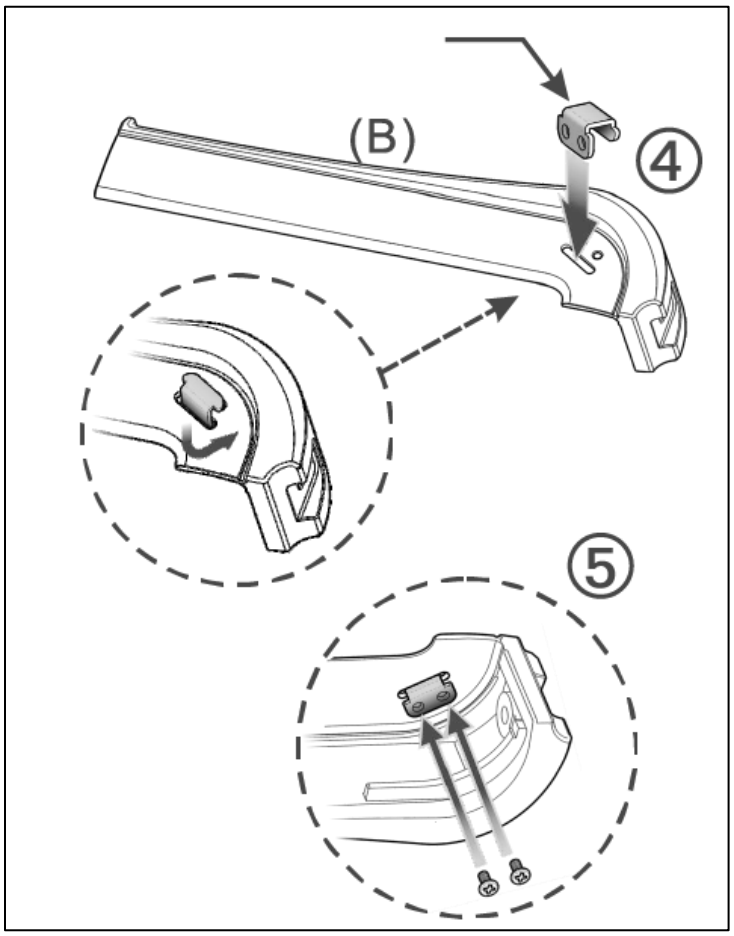

6. Install back the 4 bumpers.
7. Fix the bumper with 2 small screws. Please repeat this procedure for the other bumpers.

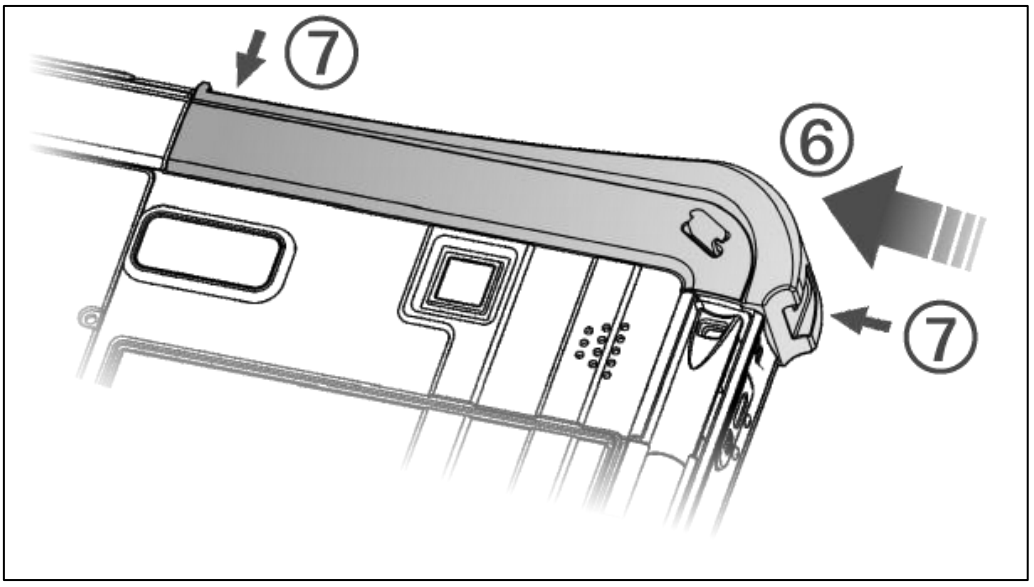

8. Place the tablet horizontally and align the thread bushing downwards to the positioning pins of the leather case.

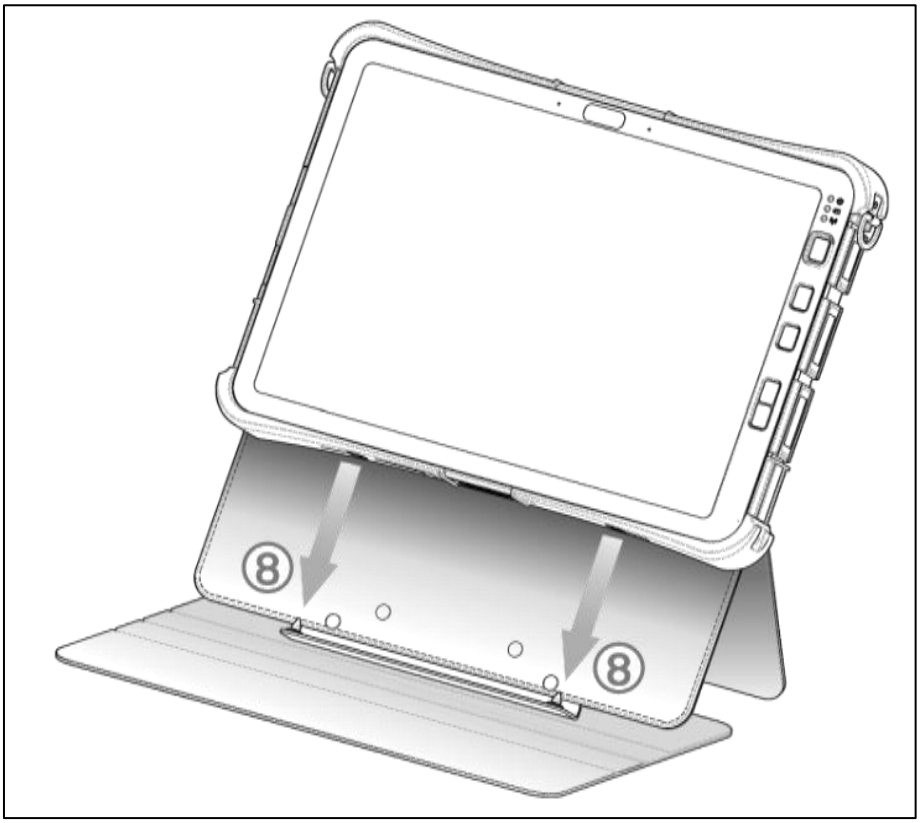

9. Tear off the Velcro strap and put the steel loop in place.
10. Buckle the steel loop (C) to the strap bracket. Please repeat this procedure on the other side.

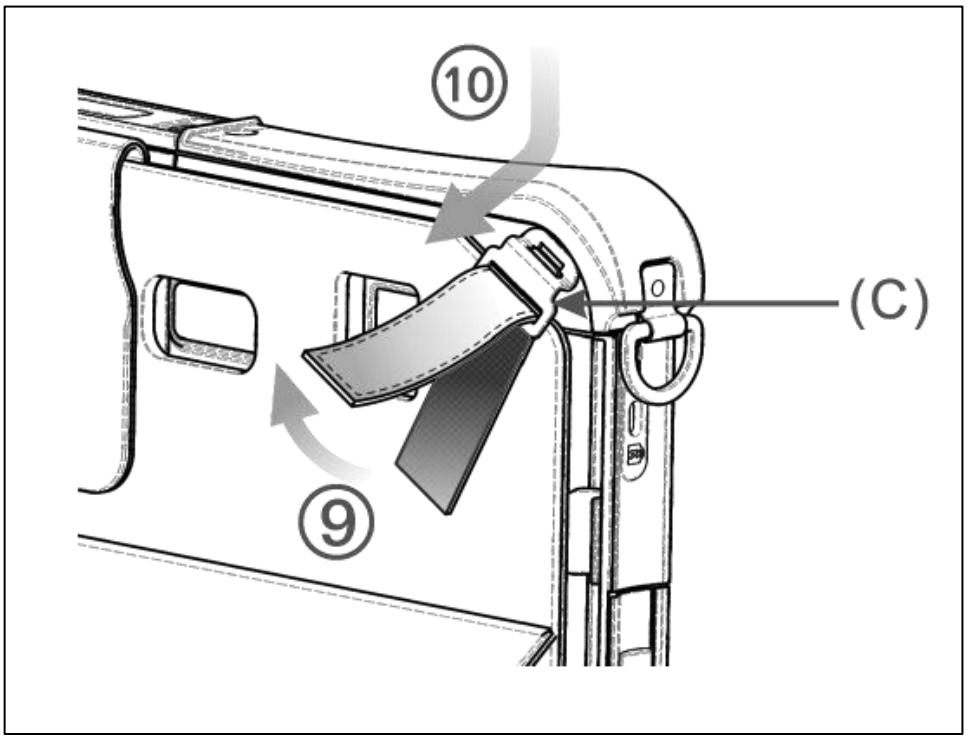

11. Tighten the Velcro straps on both sides.

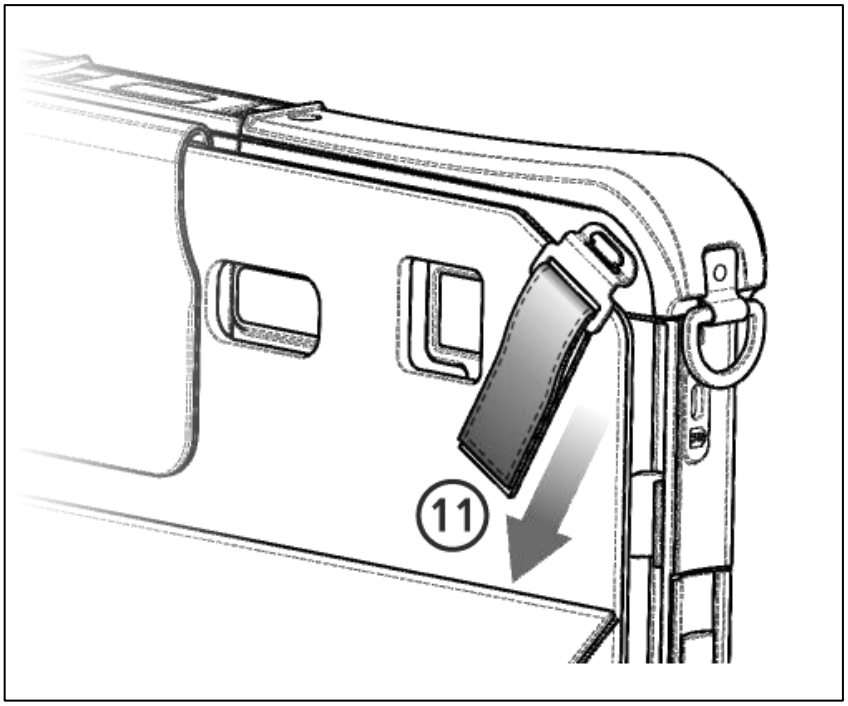

Twinhead International Corp.
11F, No.550, Ruiguang Rd., Neihu, Taipei 11492, Taiwan, R.O.C.